Casit 1100
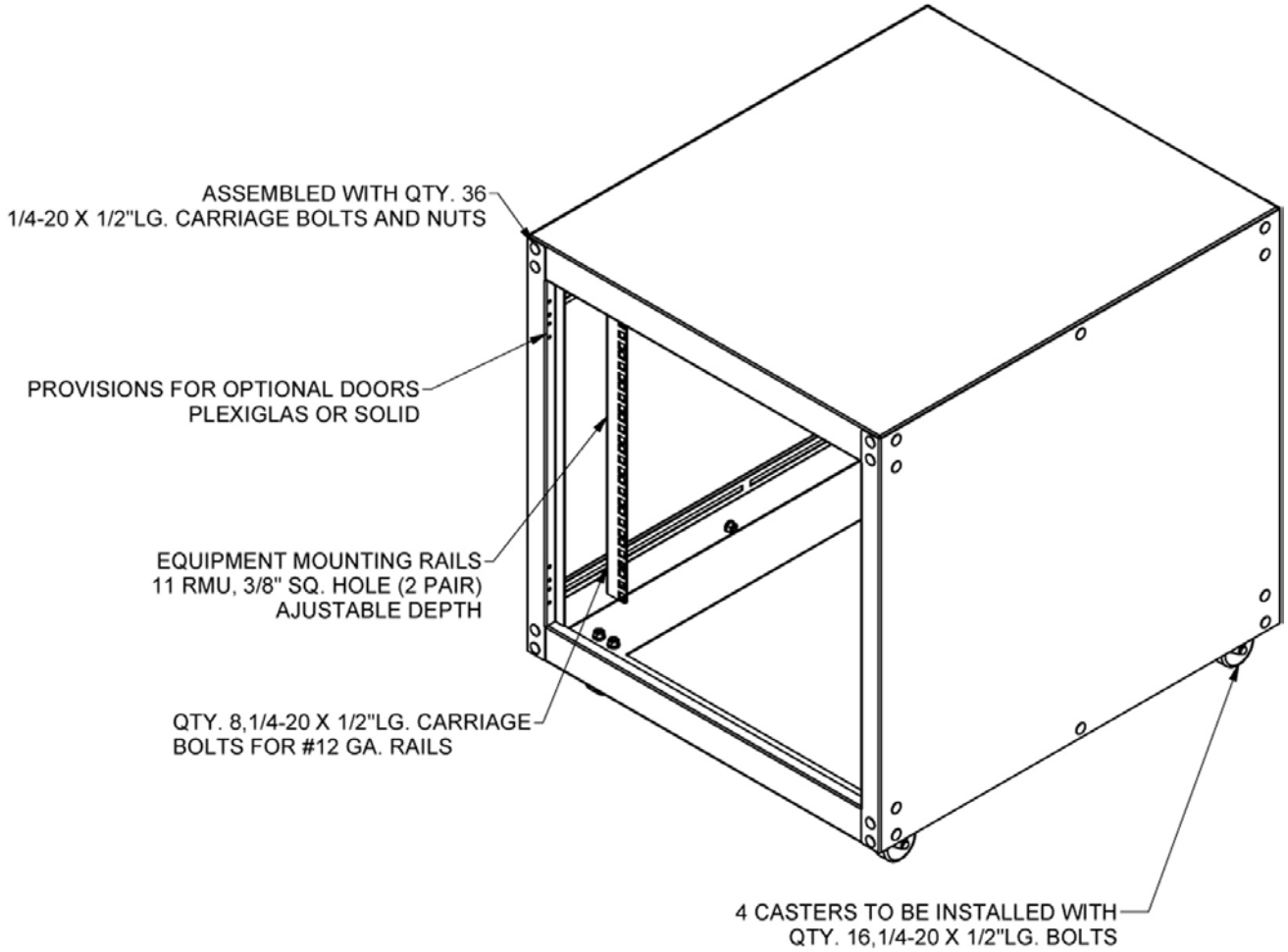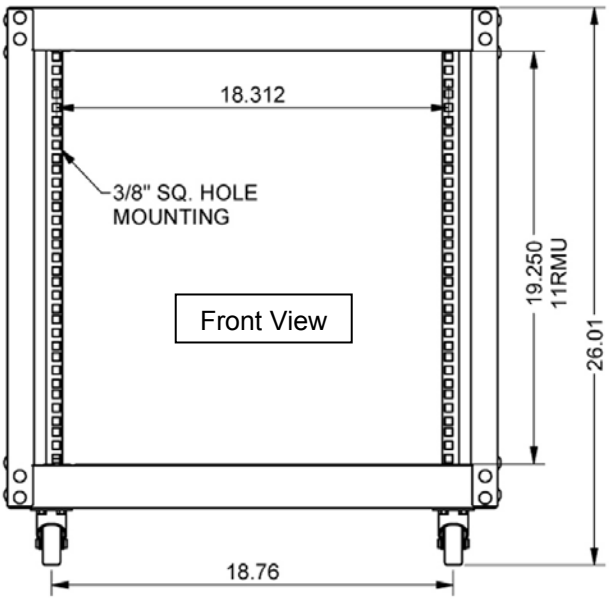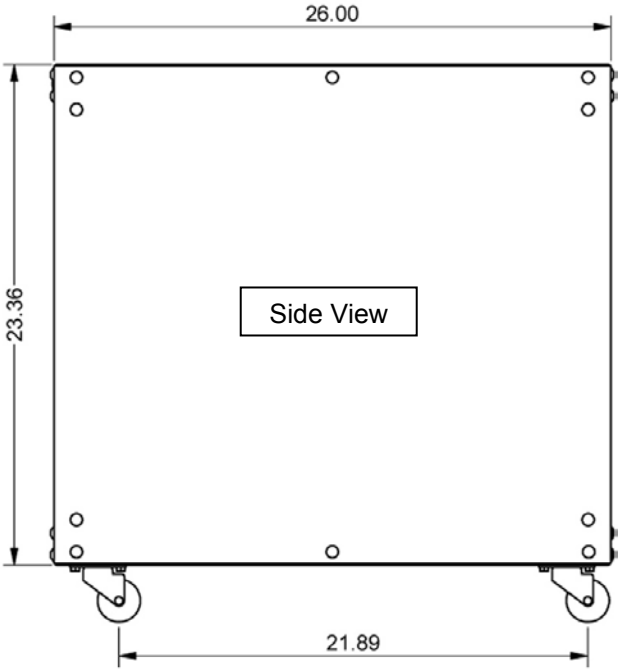
RacKit® Technology Corporation
Product Specifications